PTERYGIUM BRACHYTHERAPY PHYSICS

Sou-Tung Chiu-Tsao, Ph.D.

Beth Israel Medical Center & St. Luke's - Roosevelt Hospital Center
New York, NY

ABS/AAPM Summer School, Seattle, July 21, 2005

Goal

- To present the Procedures involved in the Radiation Treatment of Pterygium
  - Pterygium is a Benign Disease that responds to radiation.

Treatment Modalities

- Primary
  Surgical Excision
- Followed by Brachytherapy
  using $^{90}Sr/^{90}Y$ Eye Applicator

Post-Op Brachytherapy

- Reduces Recurrence after Surgical Excision

- Post-Op Waiting Time
- Dose Fractionation Scheme

Roles of Professionals

- After an ophthalmologist makes the diagnosis of pterygium, he/she refers the patient to a radiation oncologist for consultation.
- When ^{90}Sr eye applicator treatment is chosen as a treatment modality post surgery, the physicist participates in and organizes
  - treatment planning tasks
  - quality assurance of treatment delivery
  - radiation safety procedures

Introduction

- Normal Eye Anatomy
- Benign Pterygium in Eye
- Sr-90/Y-90 Eye Applicator

Eye Anatomy

- Outer Layer
  - Sclera
  - Cornea
- Middle Layer - Uvea
  - Choroid
  - Ciliary Body
  - Iris
- Inner Layer
  - Retina

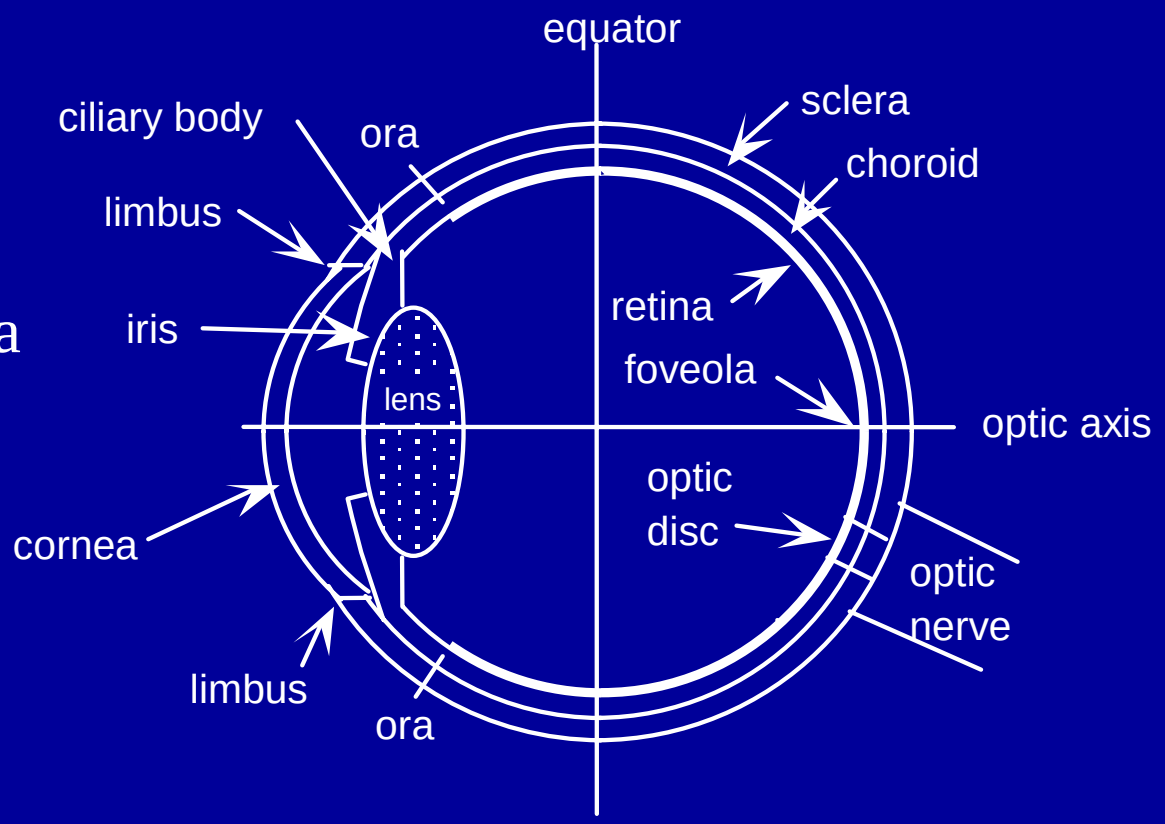

Normal Eye

Courtesy Mark Erickson

Pterygium in an Eye

Courtesy Mark Erickson

Treatment Modalities

- Primary
  Surgical Excision
- Followed by Brachytherapy
  using $^{90}Sr/^{90}Y$ Eye Applicator

With Radiation No Radiation

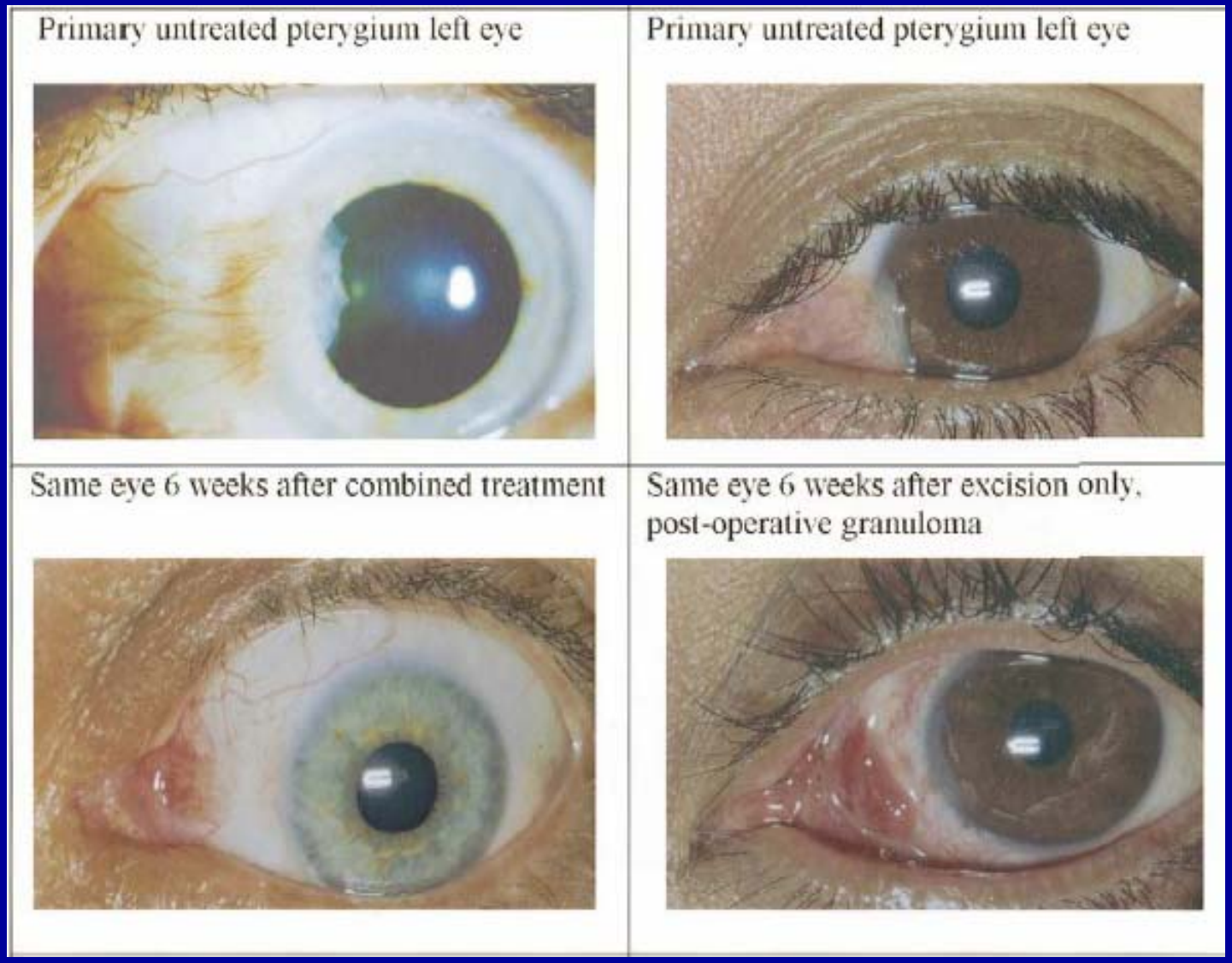

Pre-Op

6 weeks

Courtesy Jürgenliemk

With Radiation No Radiation

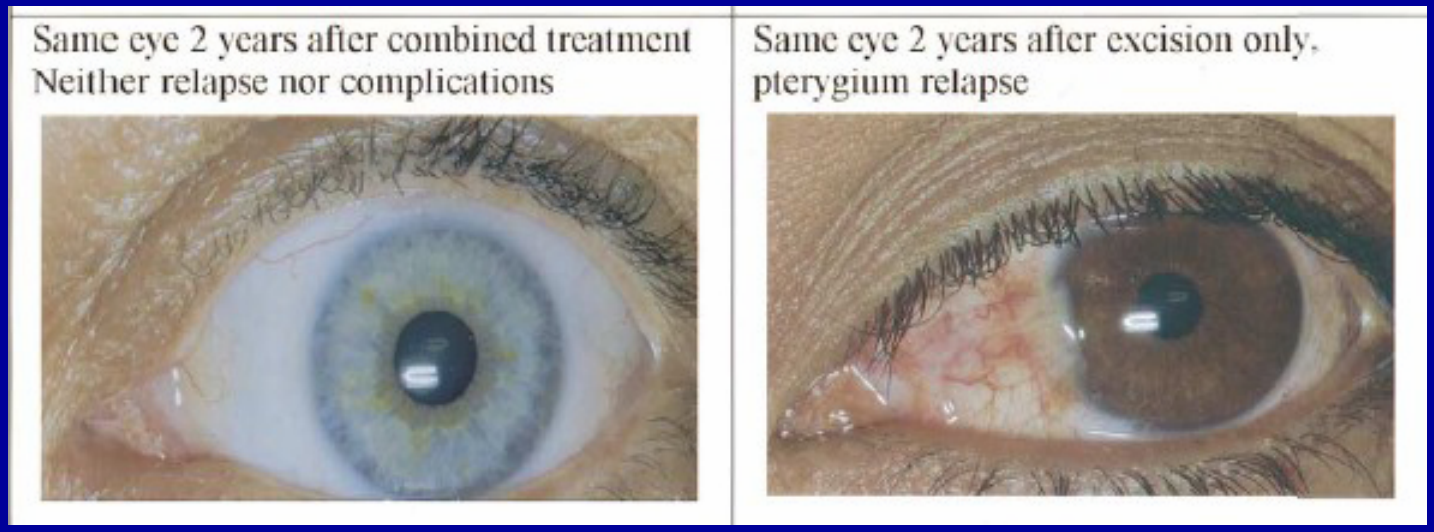

2 years

Courtesy Jürgenliemk

Dose fractionation schemes

Table 4. Radiation schedules recurrence rates and BED values

Author	Patients (n)	Fractions (n)	Dose per fraction (Gy)	Total dose (Gy)	Overall time (d)	Recur-rence (%)	BED3	BED3 RF 1.5	BED10	BED10 RF 1.5	BED25	BED25 RF 1.5	BED35	BED35 RF 1.5
Pajic *et al.* (41)	97	4	12.5	50	20	2	258.3	228.3	112.5	82.5	75.0	45.0	67.9	37.9
Smith *et al.* (30)	35	5	5	25	4	5.8	66.7	60.7	37.5	31.5	30.0	24.0	28.6	22.6
Monteiro-Grillo *et al.* (2)	20	3	10	30	4	5.4	130.0	124.0	60.0	54.0	42.0	36.0	38.6	32.6
Monteiro-Grillo *et al.* (2)	80	6	10	60	35	19	260.0	207.5	120.0	67.5	84.0	31.5	77.1	24.6
Nishimura *et al.* (31)	367	4.5	8.9	40	25	11.8	158.7	121.2	75.6	38.1	54.2	16.7	50.2	12.7
Fukushima *et al.* (9)	391	1	30	30	20	8.6	330.0	300.0	120.0	90.0	66.0	36.0	55.7	25.7
Amano *et al.* (32)	61	2	10.8	21,6	9	23	99.4	85.9	44.9	31.4	30.9	17.4	28.3	14.8
Schultze *et al.* (33)	49	5	6	30	4	8.6	90.0	84.0	48.0	42.0	37.2	31.2	35.1	29.1
Parayani *et al.* (34)	677	6	10	60	35	1.7	260.0	207.5	120.0	67.5	84.0	31.5	77.1	24.6
Wilder *et al.* (1)	284	8	3	24	13	12	48.0	28.5	31.2	11.7	26.9	7.4	26.1	6.6
de Keizer (7)	18	3	10	30	13	0	130.0	110.5	60.0	40.5	42.0	22.5	38.6	19.1
Present study	44	1	25	25	0	6.8	233.3	233.3	87.5	87.5	50.0	50.0	42.9	42.9
MacKenzie *et al.* (35)	685	1	22	22	0	12	183.3	183.3	70.4	70.4	41.4	41.4	35.8	35.8
Beyer (36)	127	1	30	30	0	10.2	330.0	330.0	120.0	120.0	66.0	66.0	55.7	55.7
Wesberry and Wesberry (37)	171	1	20	20	0	8	153.3	153.3	60.0	60.0	36.0	36.0	31.4	31.4
Smith *et al.* (30)	52	5	5	25	4	5.8	66.7	60.7	37.5	31.5	30.0	24.0	28.6	22.6
Alaniz-Camino (38)	483	4	7	28	4	4.3	93.3	87.3	47.6	41.6	35.8	29.8	33.6	27.6

Abbreviations: BED = biologically effective dose in Gray; RF = repopulation factor in Gray per day; BED3, 10, 25, 35 = BED with α/β of 3, 10, 25, 35 Gy.

Courtesy Jürgenliemk

Dose fractionation schemes

Table 4. Radiation schedules recu

Author	Patients (n)	Fractions (n)	Dose per fraction (Gy)	Total dose (Gy)	Overall time (d)	Recur-rence (%)	BEI
Pajic *et al.* (41)	97	4	12.5	50	20	2	258
Smith *et al.* (30)	35	5	5	25	4	5.8	66
Monteiro-Grillo *et al.* (2)	20	3	10	30	4	5.4	130
Monteiro-Grillo *et al.* (2)	80	6	10	60	35	19	260
Nishimura *et al.* (31)	367	4.5	8.9	40	25	11.8	158
Fukushima *et al.* (9)	391	1	30	30	20	8.6	330
Amano *et al.* (32)	61	2	10.8	21,6	9	23	99
Schultze *et al.* (33)	49	5	6	30	4	8.6	90
Parayani *et al.* (34)	677	6	10	60	35	1.7	260
Wilder *et al.* (1)	284	8	3	24	13	12	48
de Keizer (7)	18	3	10	30	13	0	130
Present study	44	1	25	25	0	6.8	233
MacKenzie *et al.* (35)	685	1	22	22	0	12	183
Beyer (36)	127	1	30	30	0	10.2	330
Wesberry and Wesberry (37)	171	1	20	20	0	8	153
Smith *et al.* (30)	52	5	5	25	4	5.8	66
Alaniz-Camino (38)	483	4	7	28	4	4.3	93

Abbreviations: BED = biologically effective dose in Gray; RF = repopulation factor in Gr

Courtesy Jürgenliemk

Dose fractionation schemes

Total Dose

20 to 60 Gy

Dose per fraction

3 to 30 Gy per fraction

Number of fractions

1 to 8 fractions

$^{90}Sr/^{90}Y$ Eye Applicator

- Beta Emitter
- Energy: Maximum 2.27 MeV
- Half Life: 28 Years
- Planar Geometry
  - Flat
  - Curved
- Many $^{90}Sr/^{90}Y$ Eye Applicators were manufactured a few decades ago

Courtesy IAEA

Schematics of Eye Applicator

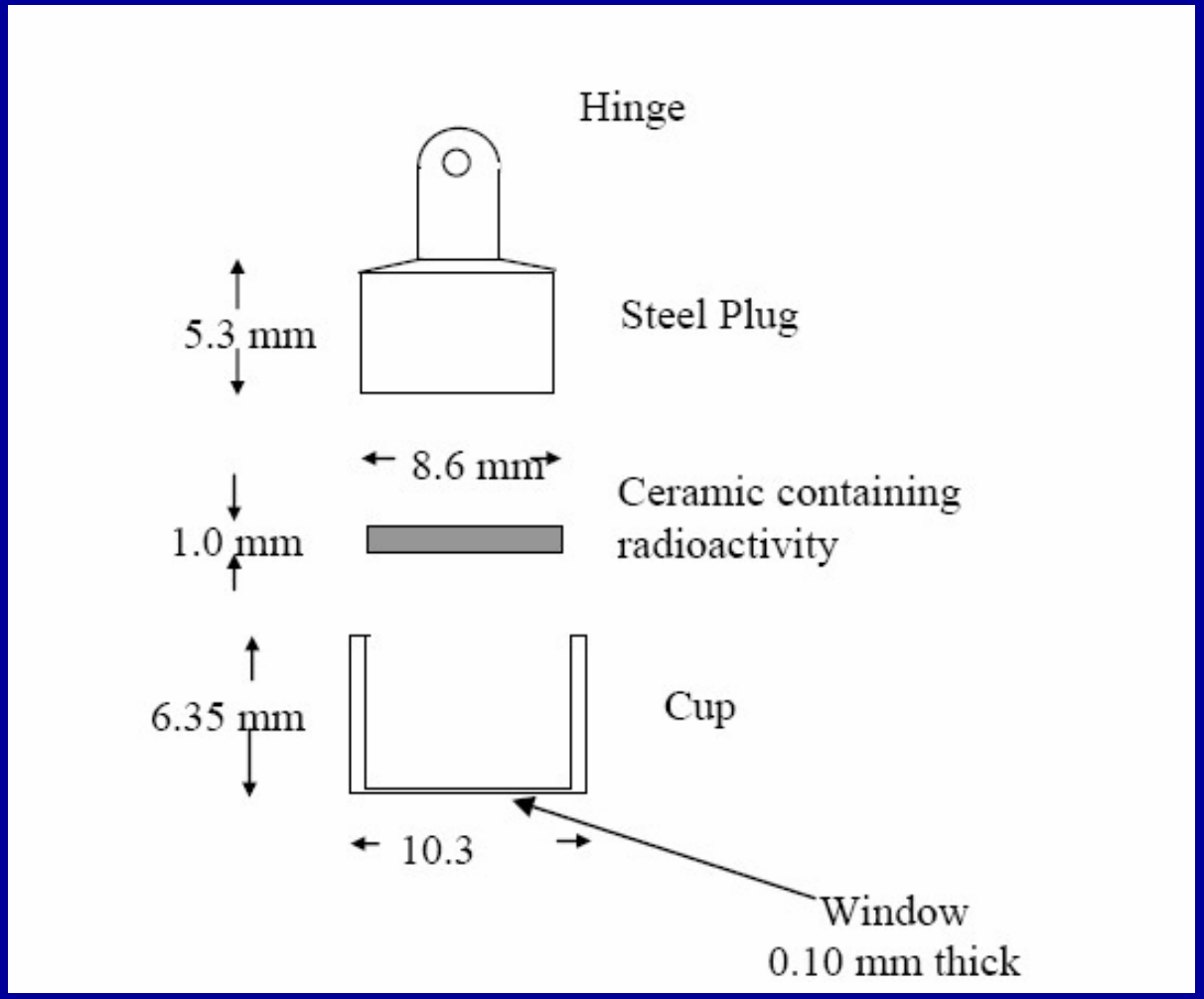

Courtesy Soares, NIST

Flat Eye Applicator

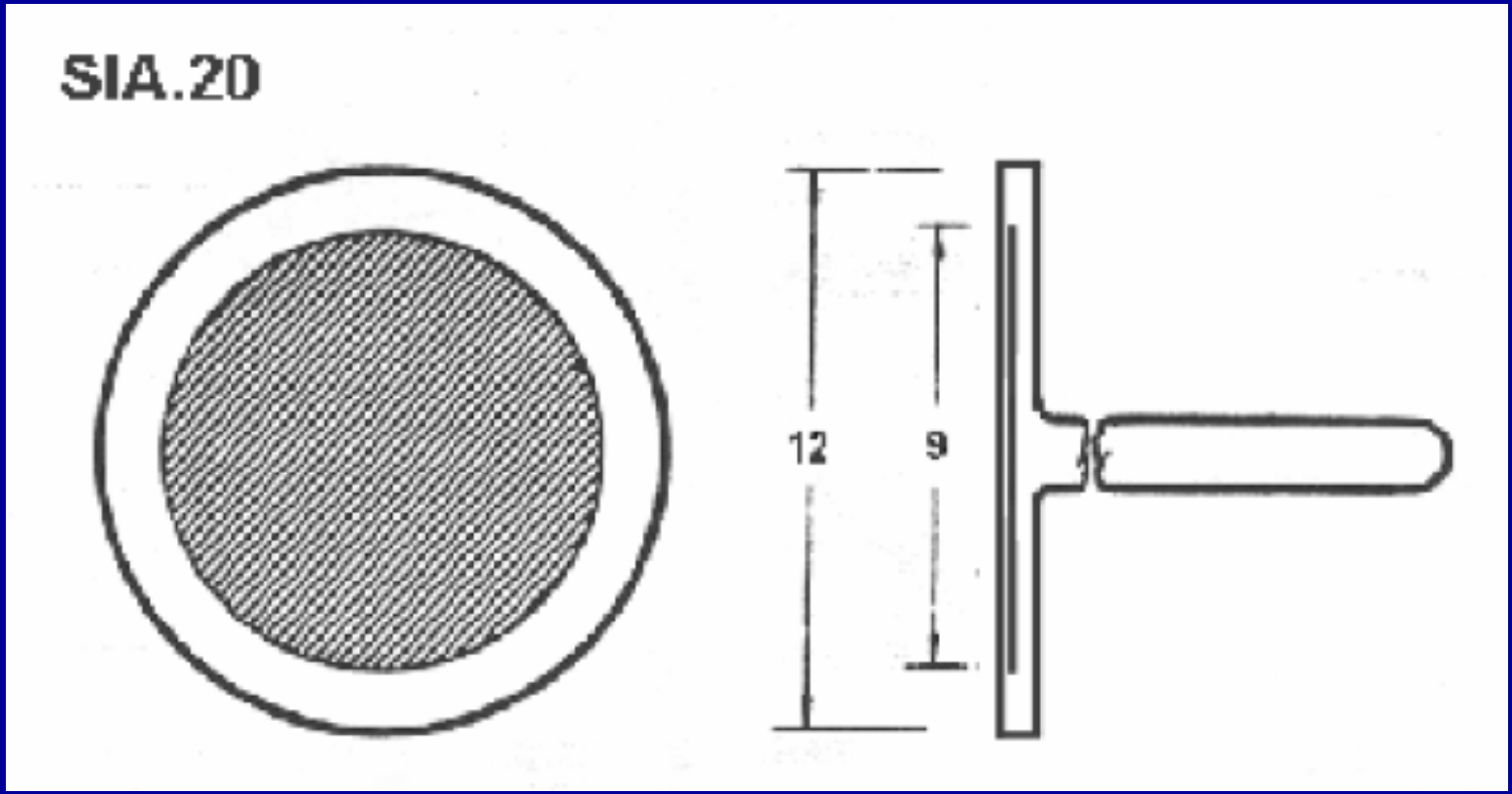

Courtesy Kollaard

Curved Eye Applicator

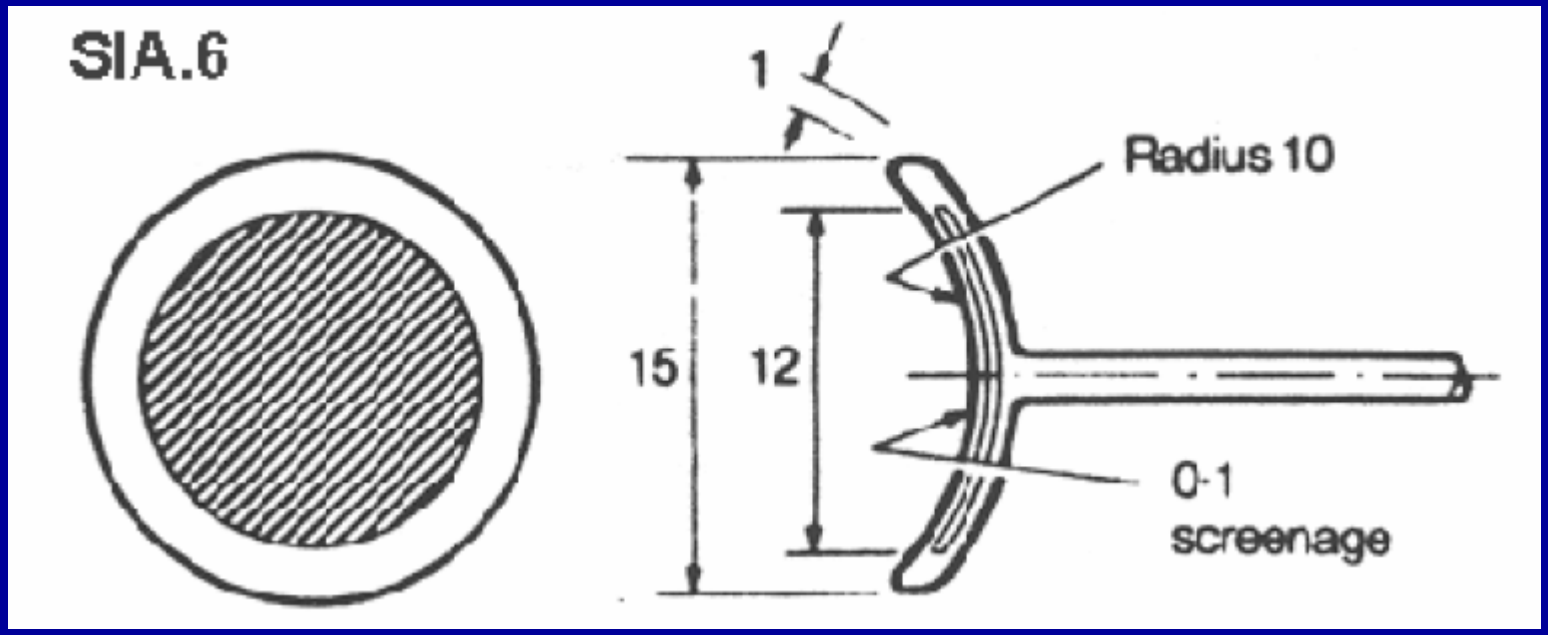

Courtesy Kollaard

Surface Dose Rate Calibration

- Surface dose rate calibration procedure is given in Chapter 11 (Monday lecture) by Dr. Larry DeWerd.

Isodose Curves at the Applicator Surface

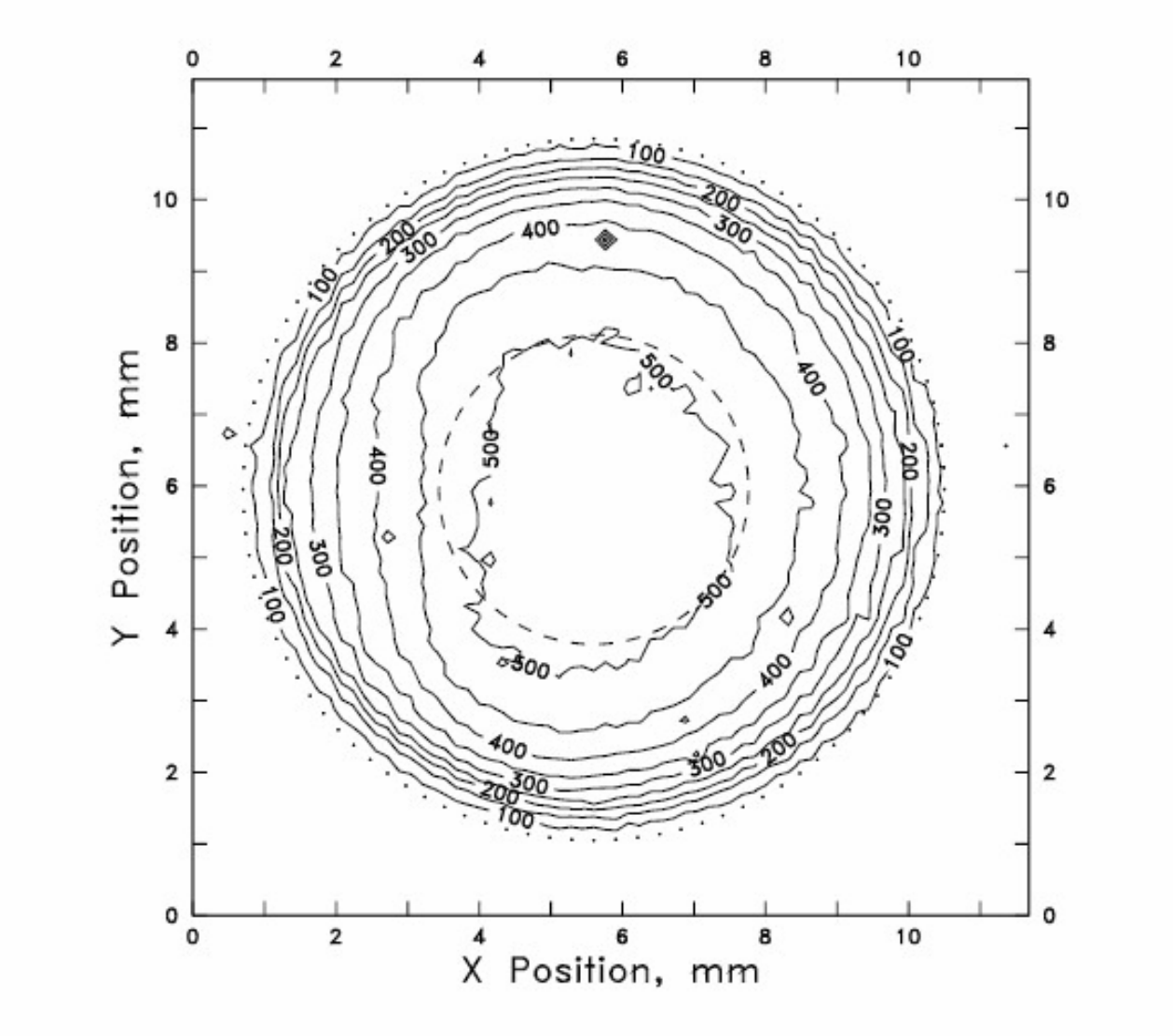

Courtesy Soares, NIST

Surface Dose Rate

- Surface dose rate was about
  1 Gy/sec at the time of manufacture
- The surface dose rate
  in the central area of 4 mm diameter
  is reported in the calibration report
- High Dose Rate (HDR)
- Surface dose rate varies widely by model

Depth Dose Curves along the Central Axis

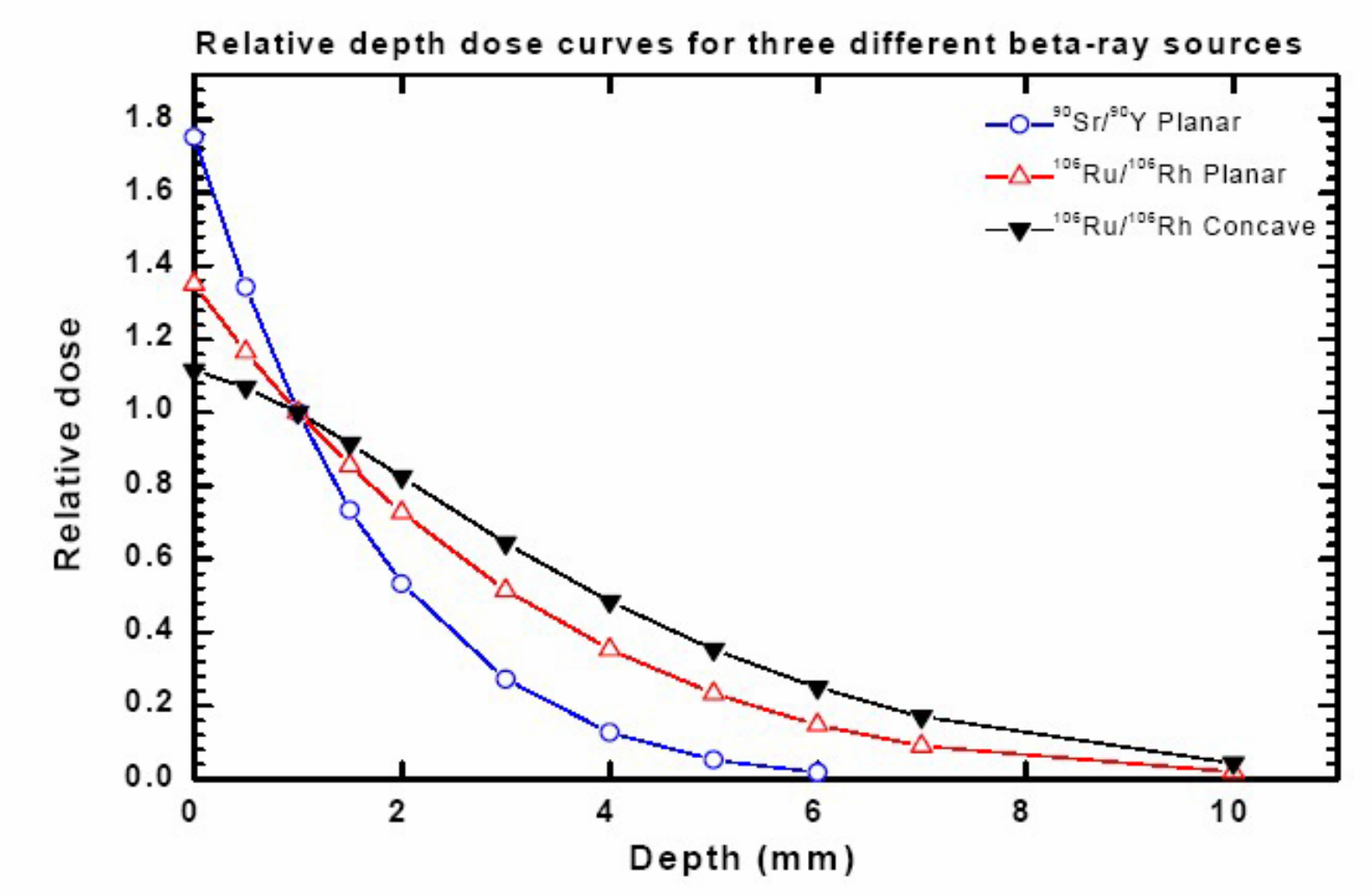

Courtesy IAEA

Dose Calibration Services

- National Institute of Standards and Technology (NIST)
- Accredited Dose Calibration Lab (ADCL) in University of Wisconsin

Dose Calibration Services

- Calculation of the emission rate
- Mapping of the ^{90}Sr distribution across the surface of the applicator in order to ascertain uniformity of dose, using
  - Extrapolation chamber and
  - Radiochromic film dosimetry
- For further information on the NIST calibration service, contact Dr. Christopher Soares at (301) 975-5589.

Treatment Planning

- Prescription dose per fraction and total dose at the applicator surface is decided, written and dated on the patient chart by the radiation oncologist (authorized user) on the case
- Treatment Time is generally calculated manually using a calculator based on the calibrated surface dose rate on the day of application (incorporating decay) by a physicist or dosimetrist (?)
- Doubled checked by a second physics team member
- The calculation and double check are documented in the patient chart.

Treatment Time

- Short
- Several Seconds

Example:

- Dose rate: 0.6 Gy/sec
- Dose per fraction: 10 Gy
- Treatment time: 17 sec

Treatment Delivery

- Treatment delivery is carried out by a team
  - Radiation Oncologist
  - Physicist
  - Nurse
- Before the application of the eye applicator, the nurse would prepare the patient and help the patient lying supine on a treatment table.

Treatment Delivery

- Radiation Oncologist holds the applicator and positions the applicator surface on the target site of pterygium for the duration of the calculated treatment time to deliver the prescribed dose.
- The treatment delivery time can be based on a stop watch held by a physicist or a nurse(?). This delivery time should be double checked by using another digital timer.

Quality Assurance

- The dose rate calibration is performed and reported by NIST or ADCL.
- The prescription dose is properly written in the treatment chart and given to physicist for calculation of treatment time.
- The treatment time is calculated according to the prescription dose and the dose rate (incorporating decay) as calibrated by NIST or ADCL.
- The treatment time calculation is double checked and properly documented.
- The patient's identity is checked prior to treatment delivery using at least tow different methods.
- The treatment site is accurate according to the surgeon's description.
- The treatment delivery time per fraction is accurate, using proper timer device.
- The treatment delivery record is properly documented.

Regulatory Guidelines

- NRC Information notice 94-17 on March 11, 1994
- Establish a Quality Management Program (QMP) on the use of ^{90}Sr eye applicator in the treatment of superficial eye conditions.
- The submitted QMP should include written policies and procedures that meet the five objectives, as described in 10 CFR 35.32(a)

Quality Management Program (QMP)

- 1. That prior to administration, a written directive, signed and dated by an authorized user, is prepared for each applicable administration. A written directive for ^{90}Sr eye-applicators means an order, in writing, for a specific patient, dated and signed by an authorized user prior to administration of radiation. It must include
  - the radioisotope,
  - the treatment site,
  - source strength (corrected for decay), and
  - exposure time (or equivalently, the total dose).

Quality Management Program (QMP)

- 2. That prior to each administration, the patient is identified by more than one method as the individual named in the written directive.
- 3. That final plans of treatment and related calculations are in accordance with the respective written directive.
- 4. That each administration is in accordance with the written directive.
- 5. That any unintended deviation from the written directive is identified and evaluated, and appropriate action taken.

NRC informed licensees in 1994

(1) Researchers at the NIST recognized large discrepancies among calibrated outputs assigned to ^{90}Sr eye applicators;

(2) Original manufacturer calibrations were expressed in older (traditional) units, which differed from the System Internationale (SI) units;

(3) Calibration values were not comparable for units from different manufacturers; and

(4) Discrepancies larger than 10% could exist when comparing output measurements between competent measurement laboratories using state-of-the-art techniques.

Two optional approaches recommended by the NRC

- Option 1

  Maintaining the same treatment regimen - Revising total dose in the written directive.

- Option 2

  Changing the treatment regimen –

  Retaining the same written directive total dose value.

Option 1, Example
Maintaining the same treatment regimen
Revising total dose in the written directive

- Based on the original manufacturer's calibration data, the authorized user believes that the exposure rate is 0.42 Gy/s, but the exposure rate based on the new calibration certificate is really 0.55 Gy/s, a value 31% higher.
- The authorized user's medical experience is that the treatment times used in the past provided good medical results.
- To achieve the same medical results, the authorized user would keep the administration time the same and increase the value of the total dose documented in the written directive by 31%.

Option 1, Example
Maintaining the same treatment regimen
Revising total dose in the written directive

10 Gy per fraction (previously intended)

0.42 Gy/sec (previously believed)

24 sec (provided good medical results)

0.55 Gy/sec (new calibration certificate)

24 sec (retain the same treatment time)

13.1 Gy per fraction (increase the dose)

Option 2, Example
Changing the treatment regimen
Retaining the same written directive total dose value

- Based on the original manufacturer's calibration data, the authorized user believes that the exposure rate is 0.42 Gy/s, but the exposure rate based on the new calibration certificate is really 0.55 Gy/s, a value 31% higher.
- The authorized user decides to keep the total dose value the same in the written directive.
- To achieve the same value for the total dose, the authorized user would have to reduce the administration time by 31%.

Option 2, Example
Changing the treatment regimen
Retaining the same written directive total dose value

10 Gy per fraction

0.42 Gy/sec (previously believed)

24 sec

10 Gy per fraction (retain the same dose)

0.55 Gy/sec (new calibration certificate)

18 sec (shorter treatment time than before)

CONCLUSION

- Procedures involved in the treatment of pterygium have been presented.